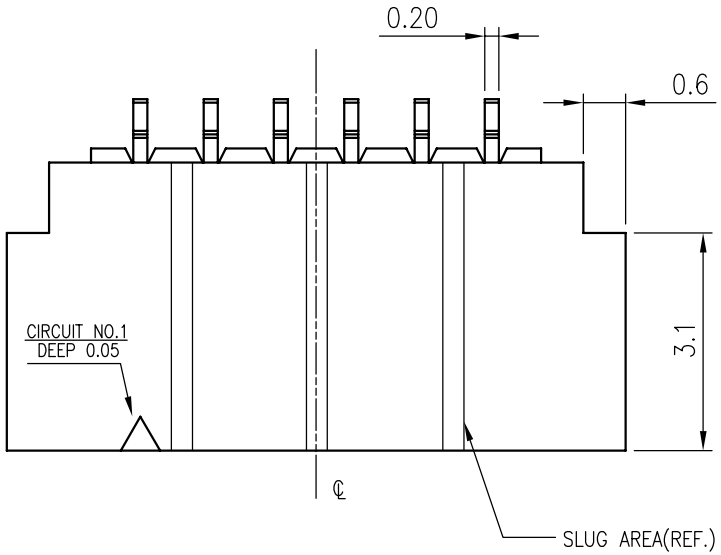

NOTES:
1. MATERIAL:
   1.1 HOUSING: HALOGEN FREE PLASTIC, HIGH TEMP., UL94V-0.
   1.2 CONTACT: COPPER ALLOY
   1.3 FITTING NAIL: COPPER ALLOY
2. FINISH:
   2.1 CONTACT:
      50~100u" NICKEL UNDERPLATING OVERALL
      1: GOLD FLASH ON CONTACT AND SOLDER
      N: MATT TIN PLATING OVERALL
   2.2 FITTING NAIL:
      50~100u" NICKEL UNDERPLATING OVERALL
      1: GOLD FLASH ON SOLDER
      N: MATT TIN PLATING OVERALL
3. REFLOW SOLDER CAPABLE TO 260°C PER ACES SPEC.
4. SPEC. PLS. REFER TO PS-51204-XXXXX-XXX
5. PART NUMBER

51200-XXX X X-XXX

No. of Ckts

Packing
0: Tape&Reel
1: Tube

Plating
N: Matt Tin(lead free)
1: G/F over all(lead free)
T: 10U GOLD PLANTING ON CONTACT

XXX	COLOR	PACKING
001	BLACK	51200-XXXXX-XX-TRP
002	BLACK	51200-XXXXX-05-TRP

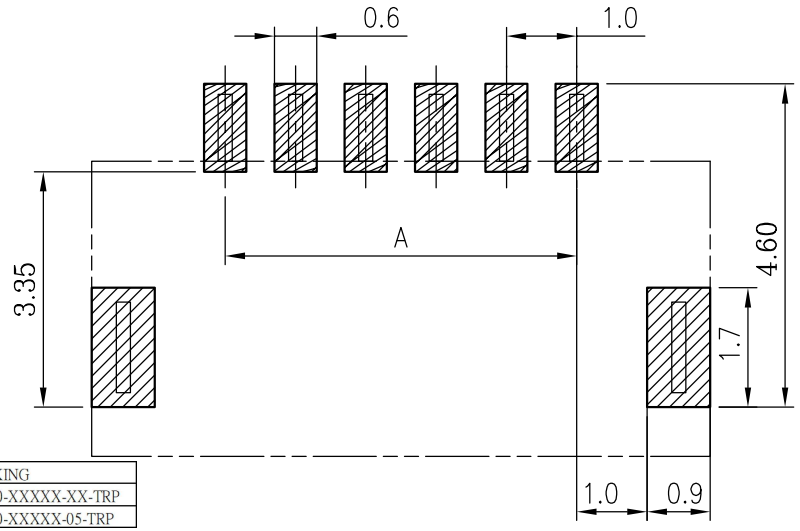

RECOMMENDED PCB LAYOUT
GENERAL TOLERANCE ±0.05

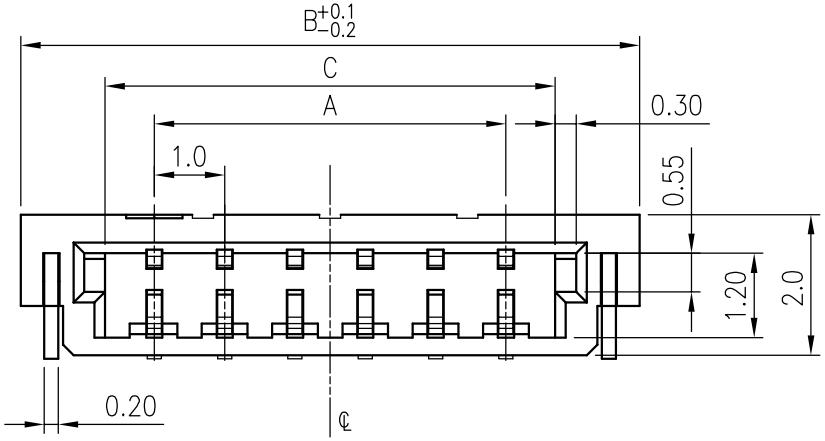

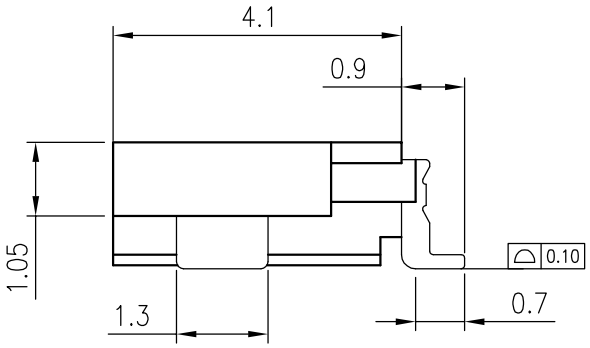

CKTS	DIM A	DIM B	DIM C
26	25.00	28.80	26.40
30	29.00	32.80	30.40

QUALITY SYMBOLS
MAJOR (M)
CRITICAL (C)

GENERAL TOLERANCES (UNLESS SPECIFIED)
X. ±0.5
.X ±0.25
.XX ±0.15
.XXX ±0.1
ANGLES ±2°

DRAWN BY: YanJinXiu	DATE: '22/01/05	ACES ELECTRONICS
CHECKED BY: BRAVE	DATE: '22/01/05	TITLE: 1.0mm pitch WTB Wafer SMT R/A S/R TYPE
APPROVED BY: BRAVE	DATE: '22/01/05	
UNITS: mm	SIZE: A4	DWG NO.: 51200-XXXXX-XXX
SCALE: 10:1	SHEET NO.: 1 OF 1	REV: A / PART NO.: SEE NOTES

2019.09.02_REV.13